LA9XFA

Manual for the 70cm-FM/FSK-Transceiver **T7F**

Holger Eckardt
DF2FQ
Kirchstockacherstr. 33
D-85662 Hohenbrunn

4199HE

Technical Data

General	
Frequency range:	430 ... 440 MHz
Channel spacing:	12.5 and 25kHz
Receive-transmit delay time:	<30ms
Temperature range:	-5 ... +50° C
Power supply:	7 ... 14V, 60mA RX, max 2.5A TX
Size:	145 x 75 x 22 mm
Receiver	
Sensitivity:	-118dBm for 20dB SINAD (CCITT) @1kHz
AF frequency response:	1Hz ... 7,000 Hz (-3dB)
AF total harmonic distortion:	<1%
Intermodulation response:	-54dB (3-tone test)
Adjacent channel response:	<-56dB
Spurious response:	<-60dB (1st image), <51dB (2nd image)
Transmitter	
RF power:	1.5W at 7V, 6.5W at 12V
AF frequency response:	1Hz ... 15,000 Hz (-3dB)
AF distortion:	<1%
Spurious transmission:	-66dBc (1st harmonic), <-75dBc else
Spurious transients:	<-40dBc on the adjacent channel

Circuit description

The circuit diagram is spread over four sheets. Figure 1 shows the synthesizer with modulation circuit, figure 2 the receive section, figure 3 the transmitter and figure 4 the control circuit.

Synthesizer

Heart of the synthesizer is the VCO (voltage controlled oscillator) which supplies RX and TX as well. A helix coil guarantees low oscillator noise and low sensitivity against microphony. Separate varicaps are used for tuning and modulation. The VCO works on half the transmission frequency to decouple it from interference by the power amplifier. A doubler follows the VCO, which again is followed by a buffer amplifier. The attenuator between the stages gives some additional decoupling. In the collector circuit of the buffer a notch filter is used to suppress the VCO frequency.

The synthesizer chip MB1504 controls the VCO. The current source of the internal phase detector is much too weak for the fast switching time that is needed, so there is an push-pull amplifier placed on the output of the phase discriminator. It drives the low-impedance loop filter.

The frequency response would be insufficient for packet radio if we would apply the modulation signal only to the VCO. Below the cut-off frequency of the loop filter the deviation would decrease with 6dB per octave. Since the cut-off frequency is 700Hz on 10Hz we wouldn't have hardly any detectable signal of the modulation. Therefore the reference oscillator is modulated as well. The frequency response of this path is complementary to that of the VCO so both paths together give a perfectly flat response.

The reference oscillator is also used to drive the second receiver mixer. Since the reference must be an integer multiple of 25kHz the IF (intermediate frequency) becomes 450kHz instead of the conventional 455kHz. This has to be considered at the crystal filter.

Receiver

Two helix filters act as pre-selector, one ahead and one behind the low noise amplifier T6. The dual-gate FET (field effect transistor) T5 acts as mixer. To obtain a good intermodulation response both stages are driven with a relatively high supply current. Printed inductors match the high impedance gates of the FET. The drain provides the IF signal. Due to the strong requirements for a flat group delay a trimmer is used to optimize the matching of the crystal filter. The filter is followed by a buffer amplifier and than by the IF circuit MC3371. Beside the 2nd mixer this IC contains a limiting amplifier, the demodulator, a RSSI (radio signal strength indicator) circuit and an operational amplifier. The latter is used as a 2nd order low-pass filter to suppress IF spurious on the output signal. The ceramic filter for the 2nd IF is internally compensated for flat group delay response.

The RSSI output provides a current which is proportional to the logarithm of the RF (radio frequency) input voltage. With a buffer amplifier this signal is good to drive a S-meter. It is also used to generate a fast DCD (data carrier detect) signal which is advantageous in particular when operating over multimode digipeaters. Within the dynamic range of the RSSI the potentiometer R53 determines the trigger threshold.

Transmitter

The driver T7 boosts the VCO signal up to 30mW. This is sufficient to drive the PA (power amplifier) module which at 12V supply voltage delivers an output power of 7W. Behind the low pass filter and the pin diode switch a power of 6W or more is available. T8 and T14 generates a linear ramp with a time constant of 5ms. The slow ramping of the PA avoids spurious signals in the adjacent channels. A 5V regulator supplies all stages of the transceiver except driver and PA module. These gets the unregulated supply voltage directly.

Control circuit

A micro controller IC is used to control the whole transceiver. It polls the PTT (push to talk) line, programs the synthesizer chip, switches receiver and transmitter path in a well defined time scheme and checks the channel select ports. The required software is stored in the EEPROM within the chip

Construction

The PCB (printed circuit board) artwork for the transceiver is shown in figure 5. It fits on an area of 144 x 72mm. You can find a part list at the end of this text. Those components which are marked with n p. in the schematics must not be placed on the board. Values of the capacitors are partly printed in exponential expression, 102 e.g. means 1nF, 473 means 47nF. Basically it is the same as with resistors only instead of colors numbers are used.

It is recommended to start the construction by fitting the low-profile parts (resistors, RF-transistors, etc.), then the capacitors and AF-transistors and finally the larger parts such as crystals and filters. No sockets must be used for the ICs except for IC1. This one however should be placed on a socket as it makes software update much easier. The flat RF transistors have one long terminal, for the bipolar types it is the collector for the FET it is the drain. The type numbers always look away from the PCB. The heat sink of T8 looks to the border of the PCB. D2 (BB405) normally does not have any printed type number on it, it can be recognized by the black body with a white ring. The resonator Q2 already includes the two feed back capacitors. It has a bubble-shaped blue body with three terminals.

Three inductors have to be wound manually. They are marked with 3T3D in the schematics. This means 3 turns, 3mm diameter. Silver plated copper wire of 0.4mm diameter should be used. The terminals are stretched to the distance of the through-holes. All other fixed inductors look like thick

resistors, they are coded by colors. L14 (3.3uH, orange orange gold) and L2-4 (0.33uH, orange orange silver) look very similar, so do L16 (0.1uH, brown black silver) and L18 (1uH, brown black gold).

The only component which is soldered from the rear side of the board is the power module. It is mounted in such a way that the heat sink looks away from the PCB. The distance between the flange and the PCB should be 4mm. This is ensured by two 4mm-spacers. The construction of the mechanics step by step:

Preparing the housing:

- Insert the BNC in the wall connector without washer and tighten the nut.
- Insert the feed-through capacitor from outside the wall and solder from inside. Bend the inner terminal so that it later fits into the hole on the PCB.
- Stick the two side walls of the housing together with the lower cover and solder the edges of the walls from inside

Preparing the PCB (considered that all components are fitted):

- Solder the four spacers concentric on the pads of the PCB, the 5mm parts on the middle pads, the 4mm ones below the PA module.
- Solder a 3cm piece of wire to the antenna pad for the BNC connector.

Assembly:

- Slip the PCB into the housing frame, connector pins first. Fit frame and PCB onto the lower cover. Adjust the PCB so that the flange of the PA module flushes with the cover.
- Solder all 13 pads of the PCB to the side walls.
- Solder middle pin of BNC connector and feed-through capacitor.
- Fit the aluminum plate onto the lower cover, insert the four screws from outside into the holes and tighten the nuts from the PCB side.
- Stick the upper cover onto the frame.

For usual packet radio operation with not more 30% transmitter duty cycle a 2.5mm aluminum plate is absolutely sufficient as heat sink. Should the transceiver be designed for heavy duty use, e.g. at a digipeater, a heat sink with less than 5K/W is necessary. On the PCB is space for a strong diode (D6) in series with the power connector to prevent damage from the transceiver by applying wrong polarity. Unfortunately the holes are too small for it's legs. So either you drill them up or you can simply mount the diode outside the housing as well.

Setting up the device

The transceiver has 9 adjustment points, anyway the adjustment is simple. The following test equipment is required:

- Digital multimeter,
- Frequency counter capable to measure at least 30MHz with a sensitivity of 20mV,
- Oscilloscope,
- AF generator for sinus and square wave signals,
- A stable source for a 70cm Signal with an adjustable level between -60 and -90dBm (in case you don't have access to a signal generator a portable transceiver with 0.5 W RF power in 30m distance will do).
- A receiver for the 70cm band with good demodulation capabilities (e.g. a scanner receiver with FM-wide mode or a 9k6-capable radio).

- A non-metalic screwdriver for tuning cores and trimmers

Start by connecting the 12V power supply voltage to the board. The current consumption should be about 60mA. After two minutes warming up connect the frequency counter to Pin 2 of IC3 (MC3371). This is the buffered output of the reference oscillator. The voltage at this point is below 100mVss. Adjust the frequency with R4 exactly to 20.950 MHz. Please keep in mind that every Hz offset produces 20 times the offset on the final frequency. This has also to be considered at the accuracy of the counter. Due to the big coupling capacitors this adjustment reacts relatively slow.

Now enter a receive frequency of 430.000 MHz. In the next chapter it is explained how to enter frequencies in general, for the first you can just switch to channel 0 by leaving all pins of X1 open. Turn L1 clockwise until the voltage at the cold end of L3 (where it hits R6) is 0.8V.

Enter a receive frequency of 435MHz by connecting pin 1 with pin 2 and pin 5 with pin 6 of X1 (this settings of course works only if the PIC is in its original state and no other frequencies have been programmed into the memory). Set the RF-generator to the same frequency and connect a digital voltmeter to the RSSI terminal (pin 10 of X2). The DCD trimmer R54 should be in 12 o'clock position because the RSSI voltage depends a little on the setting of R54. Without input signal the RSSI voltage should be between 0.4 and 0.8 V. Depending on the RF signal the voltage increases. Turn the cores of L6 and L7 and C70 recursively until the RSSI value reaches a maximum. If voltage reaches 3.5V decrease the RF input level to continue the procedure.

The next step is to modulate the generator with a 1kHz sinewave signal of 3kHz deviation. Connect the oscilloscope to the AF output terminal (pin 8 of X2). Turn the core of L9 so that the amplitude of the output signal reaches a maximum and minimize the distortion with C70. An THD value of below 1% should be reached. You can estimate the distortion very well if you have a dual trace oscilloscope where you apply the original signal to the second channel. The receive path is now ready to use.

Before tuning the transmitter make sure that the heat sink is mounted properly and the PCB is soldered firmly in the housing. Reduce the supply voltage to 7.5 volts and connect an AF generator to the modulation input terminal (pin 6 of X2). The generator should be set to an squarewave output of 400mVss at a frequency of 100Hz. Plug a dummy load or a watt meter to the BNC connector and then put the PTT terminal (pin 4 of X2) to ground. The output power should be about 1.5 W. Check the modulation with a separate receiver tuned to the transmit frequency. An oscilloscope connected to the output of the receiver most likely will show a heavily distorted squarewave signal at first. Turn R41 clockwise until the roof of the squarewave has a perfectly flat shape.

At last set the supply voltage back to 12V and check the output power. It should be 6W or more.

User interface

The transceiver has a 10 pin (X2) and a 14 pin (X1) connector. Table 2 shows the pinout. Pin 1 is located in the upper right corner of the connector with view on the pins. There are female plugs available for flat cable. X1 is used for frequency control, X2 for the link to TNC or modem.

X1:

Pin	Signal	Pin	Signal
1	D0	2	n.c.
3	D1	4	n.c.
5	D2	6	n.c.
7	D3	8	TXD
9	n.c.	10	RXD
11	PTT	12	12.5 / 25kHz
13	GND	14	+5V

X2:	Pin	Signal	Pin	Signal
	1	GND	2	+5V
	3	DCD	4	PTT
	5	GND	6	MODULATION
	7	GND	8	AF-OUTPUT
	9	n.c.	10	RSSI

n.c. = do not connect

Entering frequencies

The current version 1.4 of the control software allows the use of 12.5 and 25kHz channel spacing. Due to technical reasons the switching time between receive and transmit mode is slightly longer at 12.5 kHz operation. Pin 12 of X1 selects the spacing. By default (pin open) 25kHz is selected. If the pin is on +5V 12.5kHz operation is active.

The transceiver covers the whole 70cm Band, for repeater operation you can choose any frequency offset. The device has a memory for 10 pairs of channels for receive and transmit. The channel is selected by D0 to D3 (pins 1,3,5,7 of X1) in BCD code. This can be done with a BCD switch or by jumpers (jumper inserted=1, pin open = 0). The common terminal of the BCD switch must be connected to ground. D0 is the least significant, D3 the most significant bit. The jumpers can be plugged on adjacent pins, e.g. 1 and 2, 3 and 4 etc. Even that n.c. means no connection, the microcontroller sets those pins to ground during normal operation.

In the original configuration the 10 channels are pre-programmed with 430, 431,... to 439 MHz. This is true only if 25kHz spacing is selected.

Programming of the desired frequencies is done through the serial interface. You need a computer with a RS232 interface (e.g. COM1 or COM2 at DOS computers) and any V24-terminal software which is capable to send characters to it. Such a software is part of most operating systems. Depending on the connector type please regard to table 3 for the exact configuration.

Signal	T7F/X1	SUB-D 25	SUB-D 9
RXD	10	3	3
TXD	8	2	2
GND	13	7	5

The interface parameters must be set on the computer to 1200 BPS (bit per second), no parity, two stop bits, no local echo, no protocol (e.g. for DOS: MODE COM1 12 8 1 N). Now a simple string of characters can be entered to allocate a frequency to a particular memory location:

Cntttrrr[RETURN]

C means the upper case C on the keyboard (HEX 43), n is the memory location 0 to 9 you want to program. rrr is the channel number for the receiver and ttt that for the transmitter. The channel number has always 3 digits even if the first digit is zero. It can be computed from the following formula:

N=(f-430000)/R

N is the channel number, f is the desired operation frequency for RX or TX in kHz, and R is the channel spacing (12.5 or 25kHz). The string is not editable, if you make a mistake press enter and start again. To make it clear here two examples spacing:

Memory location 0, receive frequency 438.100 MHz, transmit frequency 430.500 Mhz, 25kHz spacing:

The string is C0020324.

Memory location 8, receive and transmit frequency 434.125 Mhz, 12.5kHz spacing:

The string is C8330330.

All characters you enter are echoed by the T7F, this is a good way to check the physical link between the devices. If you press E (HEX 45) you get a hex dump of the 40 bytes of memory. If you switch on the power of the T7F the version number of the software is sent on the TXD line.

Modem signals

AF input and output is compatible to most of the existing packet radio modems. The level of the output at 3kHz deviation is 1Vss, the modulation input needs 300...400mVss to get a deviation of 3kHz. Some modems provide a DC level on the modulation signal. In this case you have to insert a 10µF capacitor in the modulation line (plus pole to the modem).

The transceiver provides a fast DCD signal. Most modems generate a DCD signal internally from the data signal. If you operate on a multi mode digipeater it can happen that the internal DCD does not recognize the "other" mode, so you need the external DCD from the transceiver. Adjust the sensitivity with R53. If it is turned fully counter clockwise the function is disabled.

The delay time to key the transmitter is below 30ms so TXD 3 should be OK for packet radio operation. However some modems takes a certain amount of time by itself for switching so the TX delay can be considerably longer occasionally.

Voice operation and what you can do else

With little additional effort the transceiver also can be used for voice operation. A full description and an extension PCB is available on request from the author. Of course the radio can be used for 1200 BPS packet radio as well, no modification is required. If you want to operate with 19200 BPS you need wider IF filters. FI1 must be replaced by a 21U30A, for FI2 a CFUS450BY is required, C78 should have 330pF instead of 470pF.

Postscript

The published design may be used by everybody for private purposes. Each commercial usage, also from parts of the design requires a permission from the author. The author rejects any liabilities for damages which result from construction or use of the device.

Appropriate construction considered the design is compliant to all requirements of the new European standard for amateur radio equipment ETS 300-684 as well as to the EMC standard EN 55022. However the device is not certified by any administrative body.

For questions and further information the author is available in packet radio or by e-mail under df2fq@amsat.org.

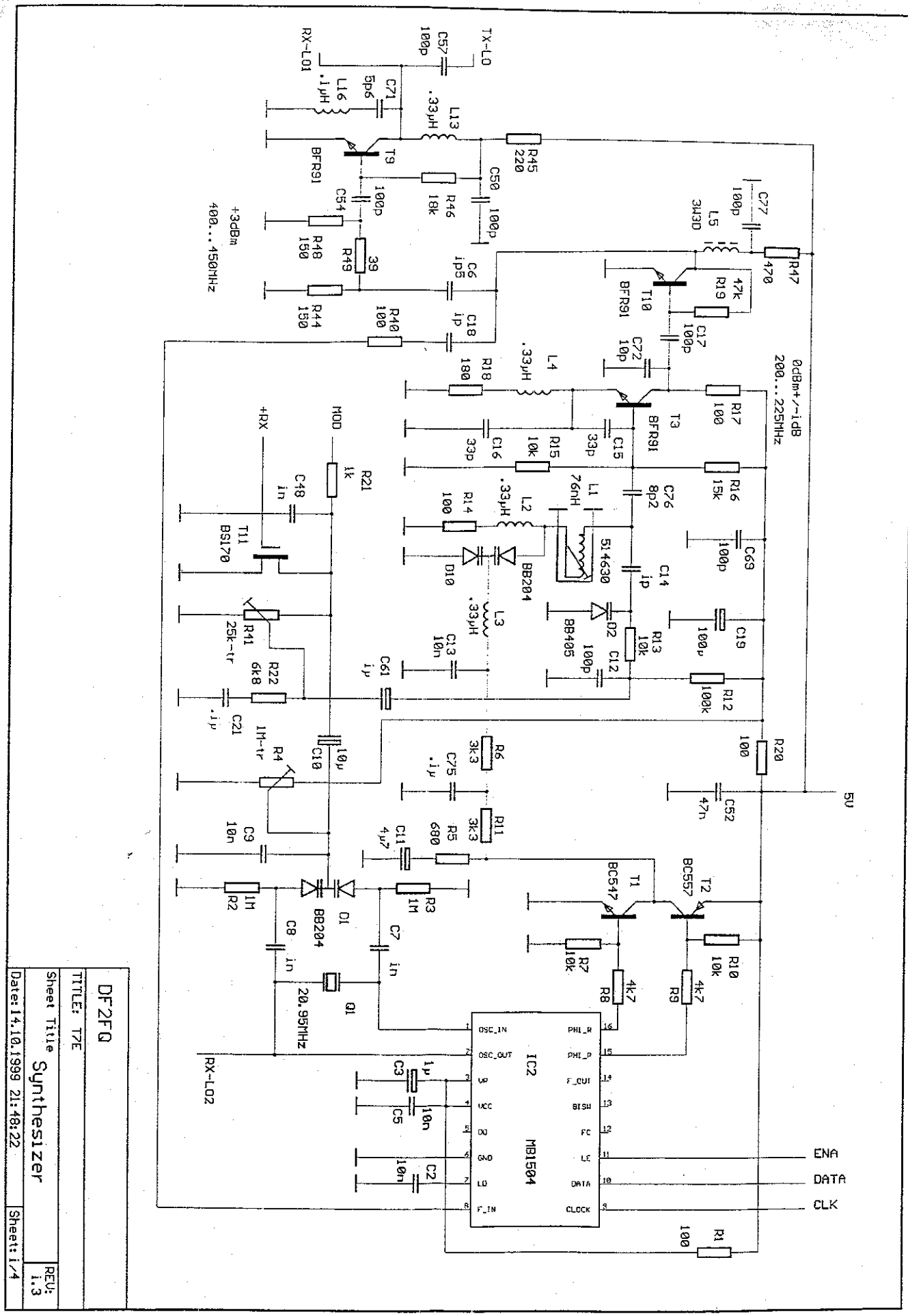
DF2FQ
TITLE: T2E
Sheet Title
Synthesizer
Date: 14.10.1999 21:48:22
Sheet: 1/4
REV: 1.3
MB1504
IC2
BFR91
BC547
BC557
BB204
BB405
BS170
20.95MHz
RX-LO1
RX-LO2
TX-LO
+3dBm
400...450MHz
0dBm+/-1dB
200...225MHz
+RX
MOD
5U
ENA
DATA
CLK

Fig. 1

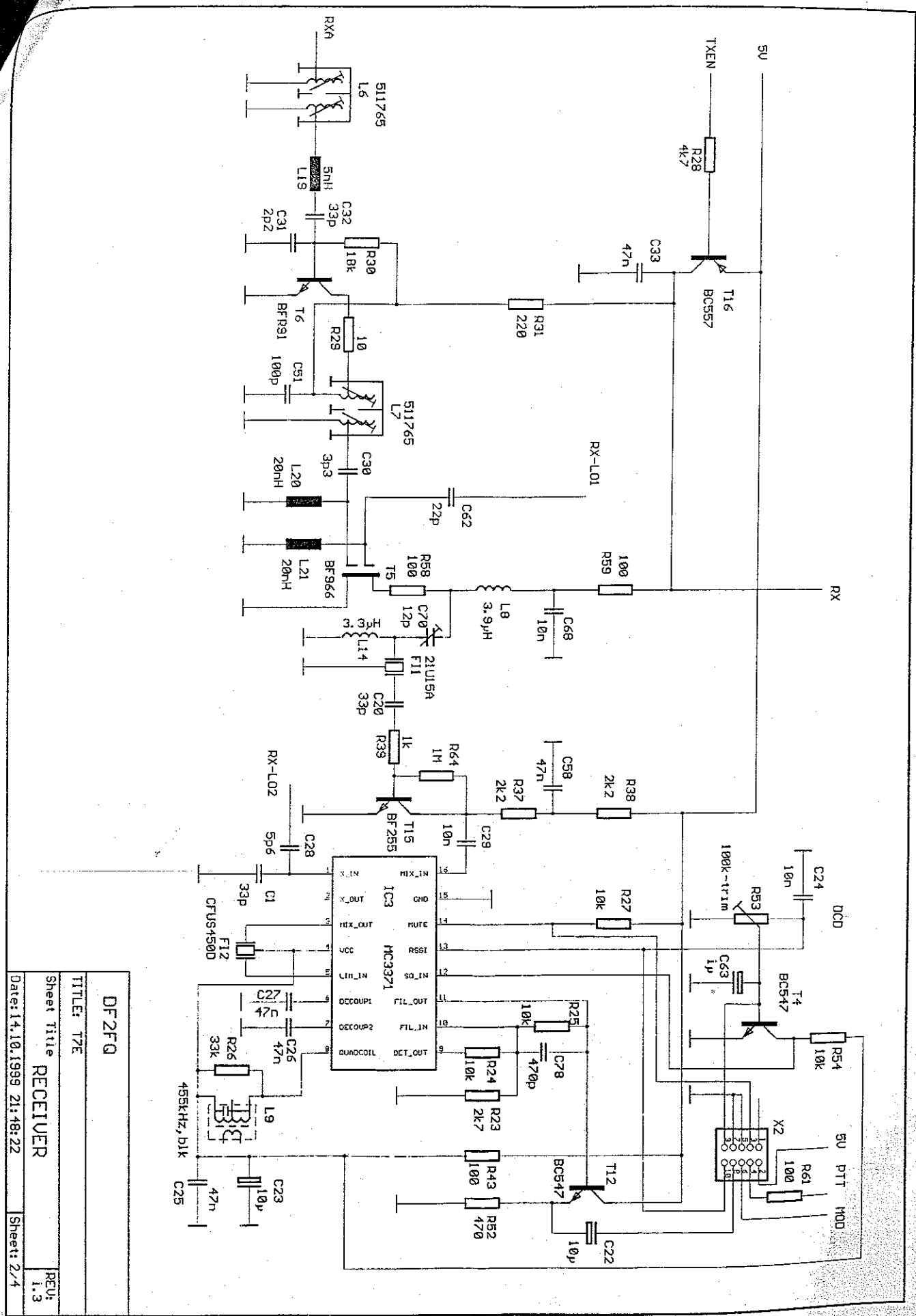
DF2FQ
TITLE: T7E
Sheet Title
RECEIVER
REV: 1.3
Date: 14.10.1999 21:48:22
Sheet: 2/4
IC3
MC3371
X_IN
X_OUT
MIX_OUT
VCC
LIM_IN
DECOUP1
DECOUP2
QUADCOIL
MIX_IN
GND
MUTE
RSSI
SQ_IN
FIL_OUT
FIL_IN
DET_OUT
RXA
TXEN
5V
RX
RX-LO1
RX-LO2
DCD
PTT
MOD
X2
T16 BC557
T6 BFR91
T5 BF966
T15 BF255
T4 BC547
T12 BC547
FI1 21U15A
FI2 CFUS450D
L6 511765
L7 511765
L8 3.9µH
L9 455kHz,blk
L14 3.3µH
L19 5nH
L20 20nH
L21 20nH
R28 4k7
R29 10
R30 18k
R31 220
R37 2k2
R38 2k2
R39 1k
R43 100
R52 470
R53 100k-trim
R54 10k
R58 100
R59 100
R61 100
R64 1M
R23 2k7
R24 10k
R25 10k
R26 33k
R27 10k
C1 33p
C20 33p
C22 10µ
C23 10µ
C24 10n
C25 47n
C26 47n
C27 47n
C28 5p6
C29 10n
C30 3p3
C31 2p2
C32 33p
C33 47n
C51 100p
C58 47n
C62 22p
C63 1µ
C68 10n
C70 12p
C78 470p

Fig. 2

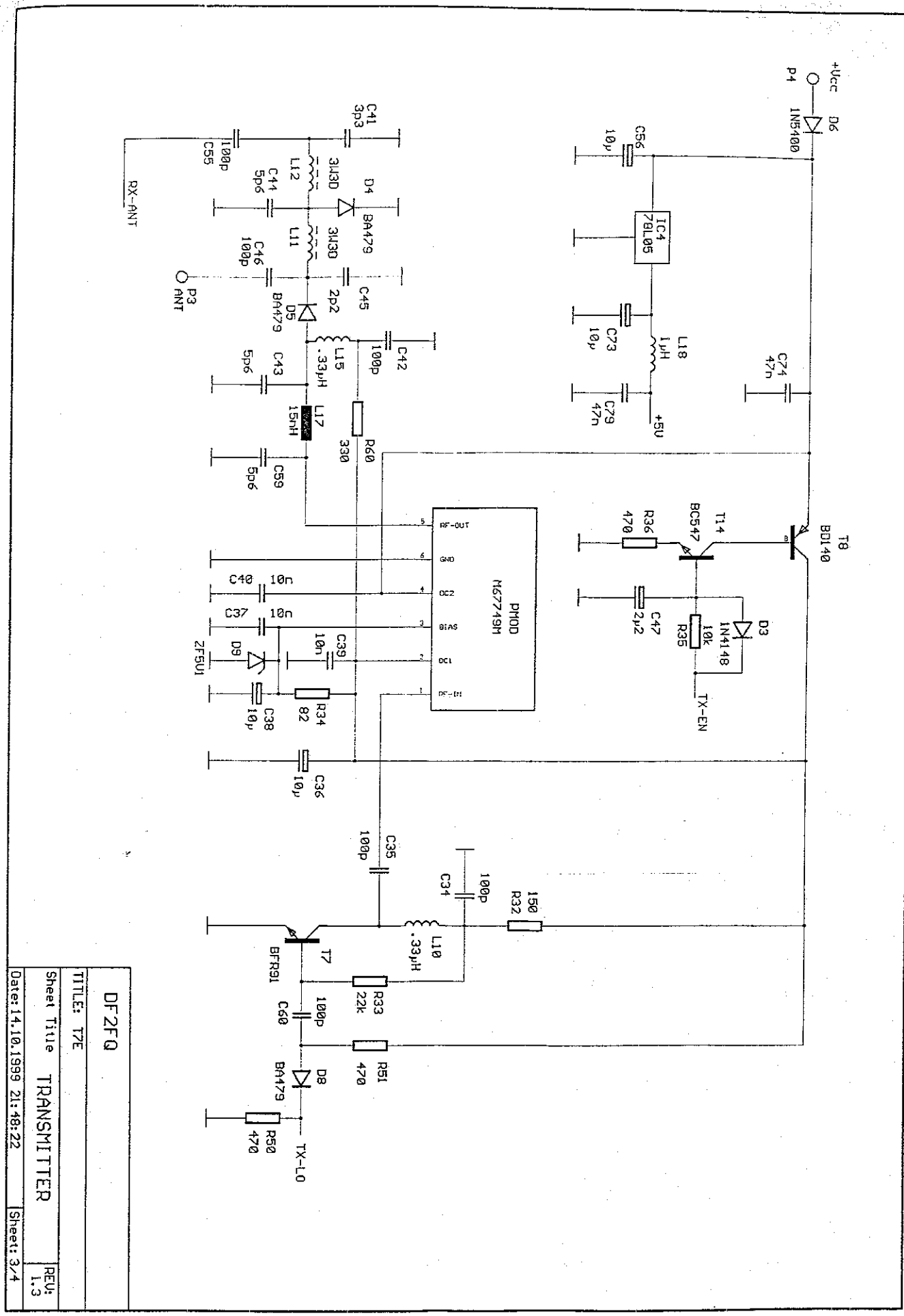
+Vcc
P4
1N5400
D6
C56
10µ
IC4
78L05
C73
10µ
L18
1µH
C74
47n
C79
47n
+5U
T8
BD140
T14
BC547
R36
470
C47
2µ2
D3
1N4148
R35
10k
TX-EN
C41
3p3
C55
100p
L12
3U3D
C41
5p6
D4
BA479
L11
3U3D
C46
100p
P3
ANT
C45
2p2
D5
BA479
L15
.33µH
C42
100p
C43
5p6
L17
15nH
R60
330
C59
5p6
RX-ANT
PMOD
N677191M
RF-OUT
GND
DC2
BIAS
DC1
RF-IN
C40
10n
C37
10n
C39
10n
D9
ZF5V1
C38
10µ
R34
82
C36
10µ
C35
100p
C34
100p
R32
150
L10
.33µH
T7
BFR91
R33
22k
C60
100p
R51
470
D8
BA479
R50
470
TX-LO
DF2FQ
TITLE: T2E
Sheet Title TRANSMITTER
REV: 1.3
Date:14.10.1999 21:48:22
Sheet: 3/4

Fig 3

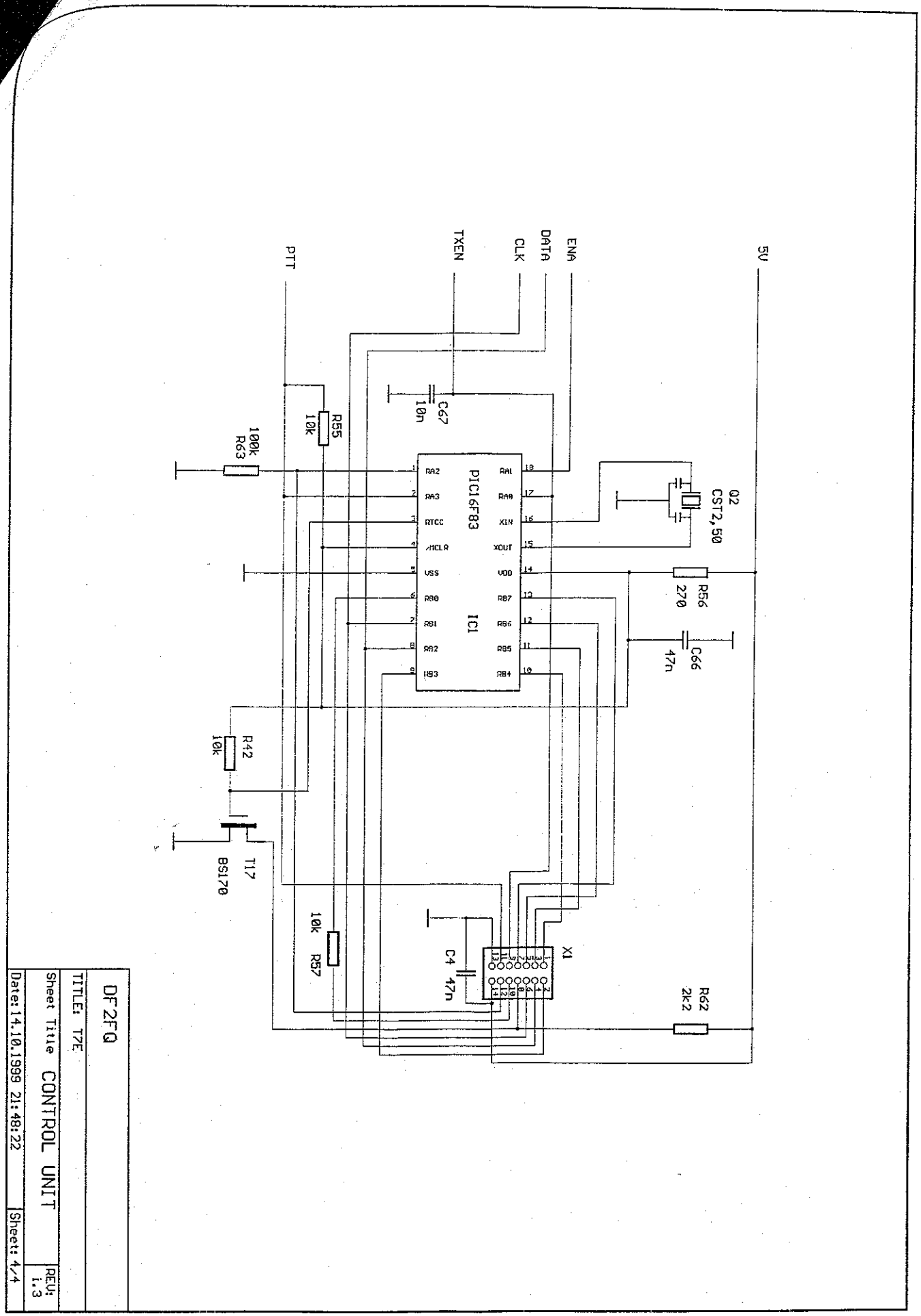
PTT
TXEN
CLK
DATA
ENA
5V
C67
10n
R55
10k
100k
R63
PIC16F83
IC1
RA2
RA3
RTCC
/MCLR
VSS
RB0
RB1
RB2
RB3
RA1
RA0
XIN
XOUT
VDD
RB7
RB6
RB5
RB4
Q2
CST2,50
R56
270
C66
47n
R42
10k
T17
BS170
10k
R57
C4
47n
X1
R62
2k2
DF2FQ
TITLE: T7E
Sheet Title CONTROL UNIT
Date: 14.10.1999 21:48:22
Sheet: 4/4
REV: 1.3

Fig. 4

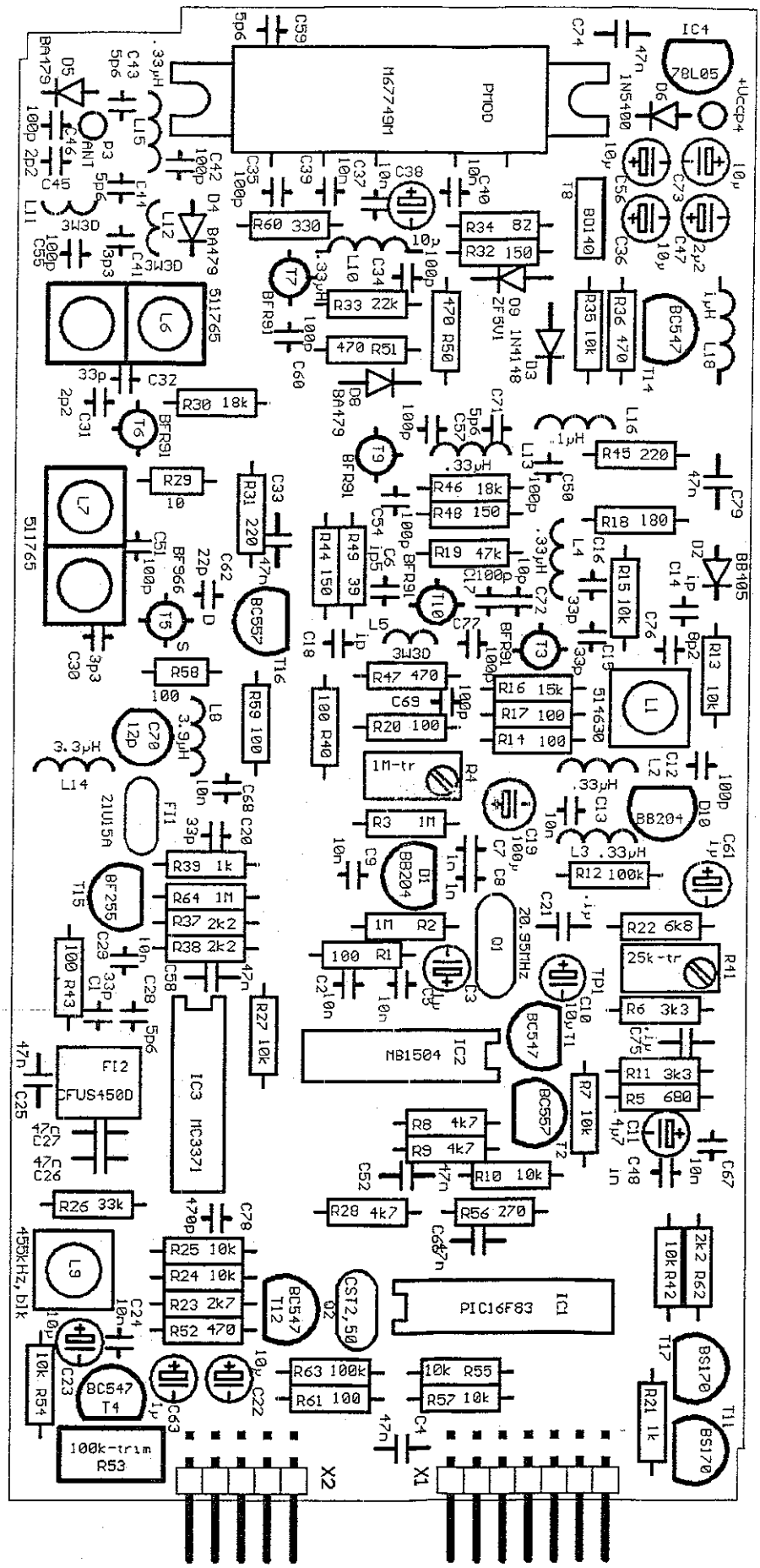

Fig 5

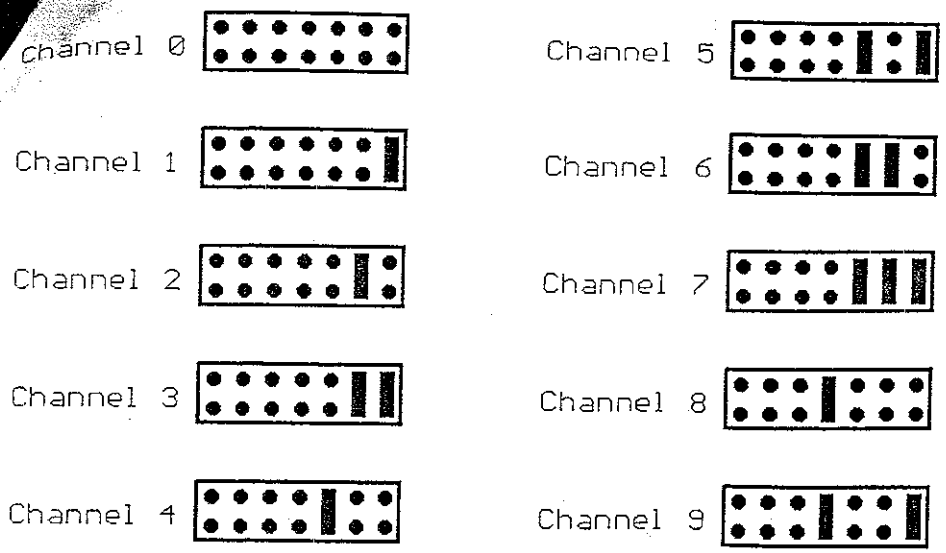

Fig. 6, Jumper position (X1)

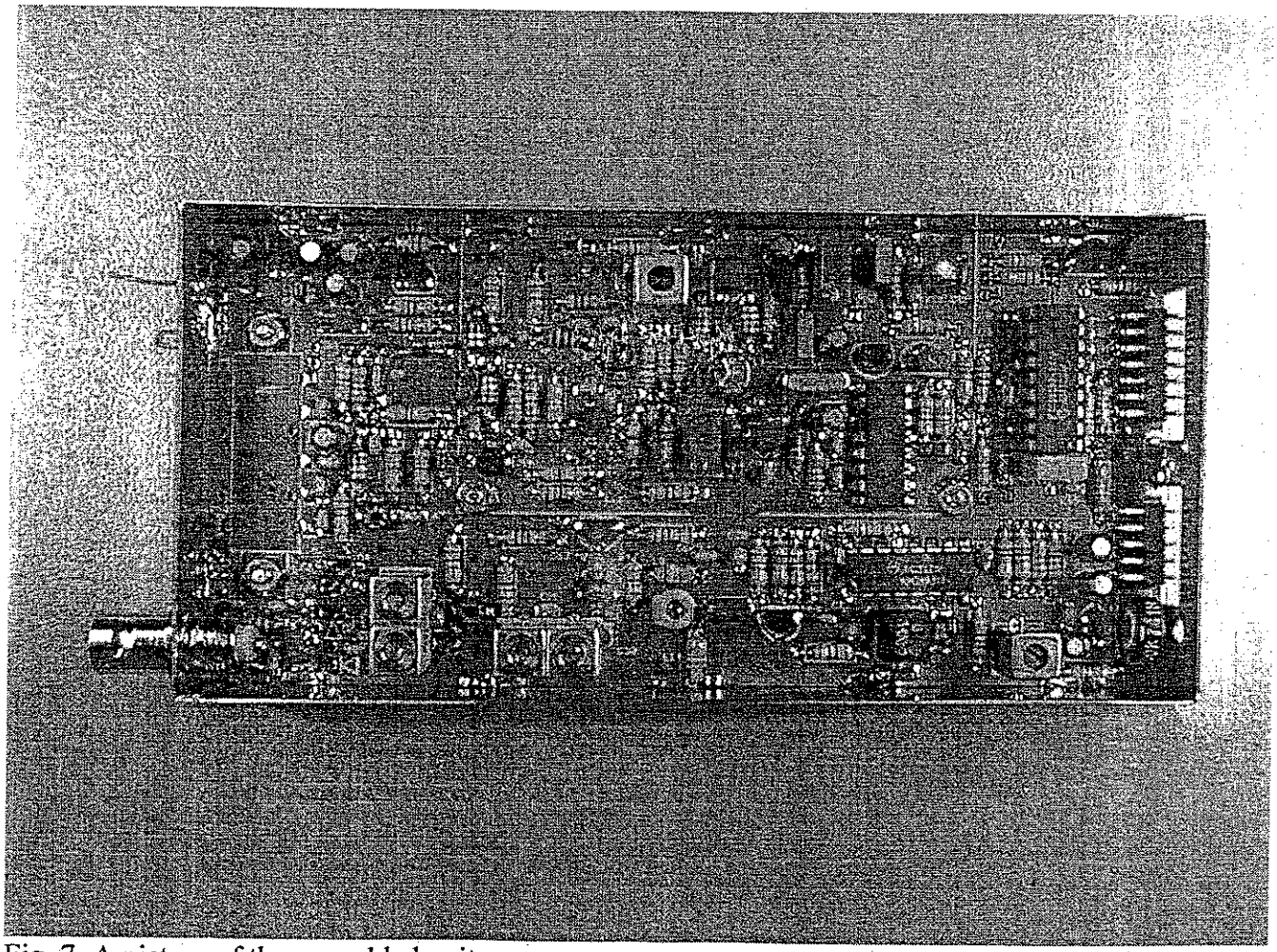

Fig. 7, A picture of the assembled unit

partlist

C1	33p
C2	10n
C3	1µF
C4	47n
C5	10n
C6	1p5
C7	1n
C8	1n
C9	10n
C10	10µF
C11	4u7
C12	100p
C13	10n
C14	1p
C15	33p
C16	33p
C17	100p
C18	1p
C19	100µF
C20	33p
C21	.1µF
C22	10µF
C23	10µF
C24	10n
C25	47n
C26	47n
C27	47n
C28	5p6
C29	10n
C30	3p3
C31	2p2
C32	33p
C33	47n
C34	100p
C35	100p
C36	10µF
C37	10n
C38	10µF
C39	10n
C40	10n
C41	3p3
C42	100p
C43	5p6
C44	5p6
C45	2p2
C46	100p
C47	2u2
C48	1n
C50	100p
C51	100p
C52	47n
C54	100p
C55	100p
C56	10µF
C57	100p
C58	47n
C59	5p6
C60	100p
C61	1µF
C62	22p
C63	1µF
C66	47n
C67	10n
C68	10n
C69	100p
C70	12p-trim
C71	5p6
C72	10p
C73	10µ
C74	47n
C75	.1µF
C76	8p2
C77	100p
C78	470p
C79	47n
D1	BB204
D2	BB405
D3	1N4148
D4	BA479
D5	BA479
D6	1N5400 or SB320
D8	BA479
D9	BZX55-5V1
D10	BB204
FI1	21U15A
FI2	CFUS450DY
IC1	PIC16F83
IC2	MB1504
IC3	MC3371
IC4	78L05
L1	514630
L2	.33µH
L3	33µH
L4	.33µH
L5	3W3D
L6	511765
L7	511765
L8	3.9µH
L9	455kHz,blk
L10	.33µH
L11	3W3D
L12	3W3D
L13	.33µH
L14	3.3µH
L15	.33µH
L16	.1µH
L18	1µH
PMOD	M67749M
Q1	20.95MHz
Q2	CST2.50
R1	100
R2	1M
R3	1M
R4	1M-trim
R5	680
R6	3k3
R7	10k
R8	4k7
R9	4k7
R10	10k
R11	3k3
R12	100k
R13	10k
R14	100
R15	10k
R16	15k
R17	100
R18	180
R19	47k
R20	100
R21	1k
R22	6k8
R23	2k7
R24	10k
R25	10k
R26	33k
R27	10k
R28	4k7
R29	12
R30	18k
R31	220
R32	150
R33	22k
R34	82
R35	10k
R36	470
R37	2k2
R38	2k2
R39	1k
R40	100
R41	25k-trim
R42	10k
R43	100
R44	150
R45	220
R46	18k
R47	470
R48	150
R49	39
R50	470
R51	470
R52	470
R53	100k-trim
R54	10k
R55	10k
R56	270
R57	10k
R58	100
R59	100
R60	330
R61	100
R62	2k2
R63	100k
R64	1M
T1	BC547
T2	BC557
T3	BFR91
T4	BC547
T5	BF966
T6	BFR91
T7	BFR91
T8	BD140
T9	BFR91
T10	BFR91
T12	BC547
T11	BS170
T14	BC547
T15	BF255
T16	BC557
T17	BS170
X1	2X07/90
X2	2X05/90