By Steven C. Hageman

Build Your Own Network Analyzer—*Part 1*

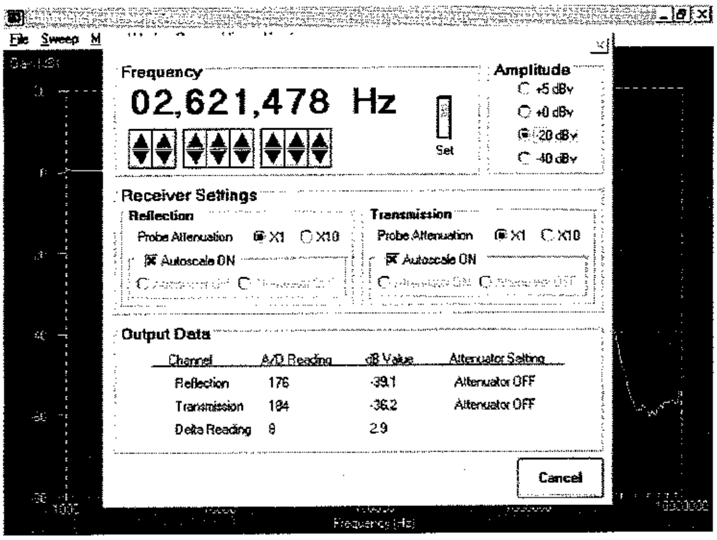

Frequency

02,621,478 Hz

Amplitude

○ +5 dBv
○ +0 dBv
● -20 dBv
○ -40 dBv

Receiver Settings

Reflection

Probe Attenuation ● X1 ○ X10

☒ Autoscale ON

Transmission

Probe Attenuation ● X1 ○ X10

☒ Autoscale ON

Output Data

Channel	A/D Reading	dB Value	Attenuator Setting
Reflection	176	-39.1	Attenuator OFF
Transmission	184	-36.2	Attenuator OFF
Delta Reading	8	2.9	

If you're an enthusiastic builder, you'll find this piece of equipment is a "must have!"

The **MANUAL** panel allows total, real-time adjustability of the Personal Network Analyzer. You can set the source frequency and amplitude, compensate for the probes, and turn on or off the receivers' automatic attenuator switching. Once per second, the data frame is updated and shows all of the analyzer data including the actual A/D reading, the converted A/D value in decibels and the receiver attenuator settings. The **MANUAL** control panel allows hardware troubleshooting and can be used for real-time adjustment of circuits at a given frequency. For example, you can peak a tuned-IF amplifier in real time by adjusting the proper frequency and tuning for the maximum delta reading.

Late in 1996, while working on a 60 kHz WWVB receiver, I was experimenting with a Philips NE604A IC.[1] I was using it because of one feature of the chip—its received signal strength indicator (RSSI) output. The RSSI output delivers a voltage that is a fairly accurate proportional representation of the input IF voltage over a –20 to –100 dB range—that's 80 dB or so of dynamic range from a single, low-cost IC! While experimenting with the part, I found that although it is designed for narrow bandwidth 455 kHz or 10.7 MHz IF applications, in a wide-band mode, it can deliver a dynamic range of 60 dB or so.

The connection was made: Using a Harris DDS chip and the NE604A, I could now build a network analyzer with a dynamic range of 50 dB and an upper-frequency limit of 16 MHz. (See the sidebar "Network Analyzers and I.") Such an analyzer is suitable for nearly all of my IF work, and the high dynamic range allows accurate measurements of high-loss filters and high-gain amplifiers. You should be able to build this 10 Hz to 16 MHz network analyzer for about $150.

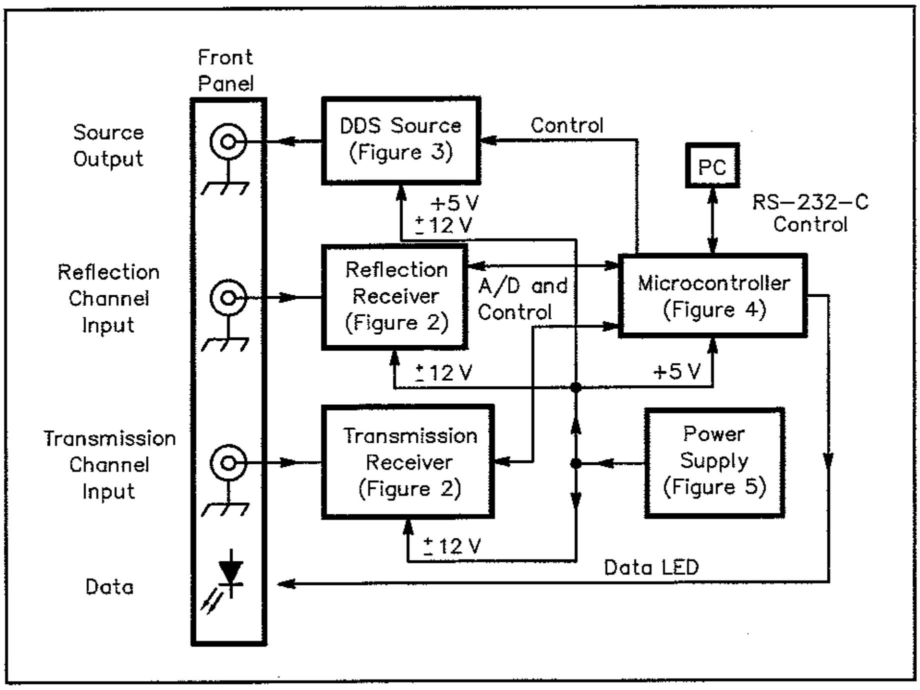

Figure 1—This block diagram of the Personal Network Analyzer closely follows that of its commercial cousins. A signal source drives the network under test. The reflection receiver measures the network's true input, and the transmission receiver measures the network's output response. The microcontroller manipulates the hardware in response to RS-232-C commands from a PC.

---

[1] Notes appear on page 00.

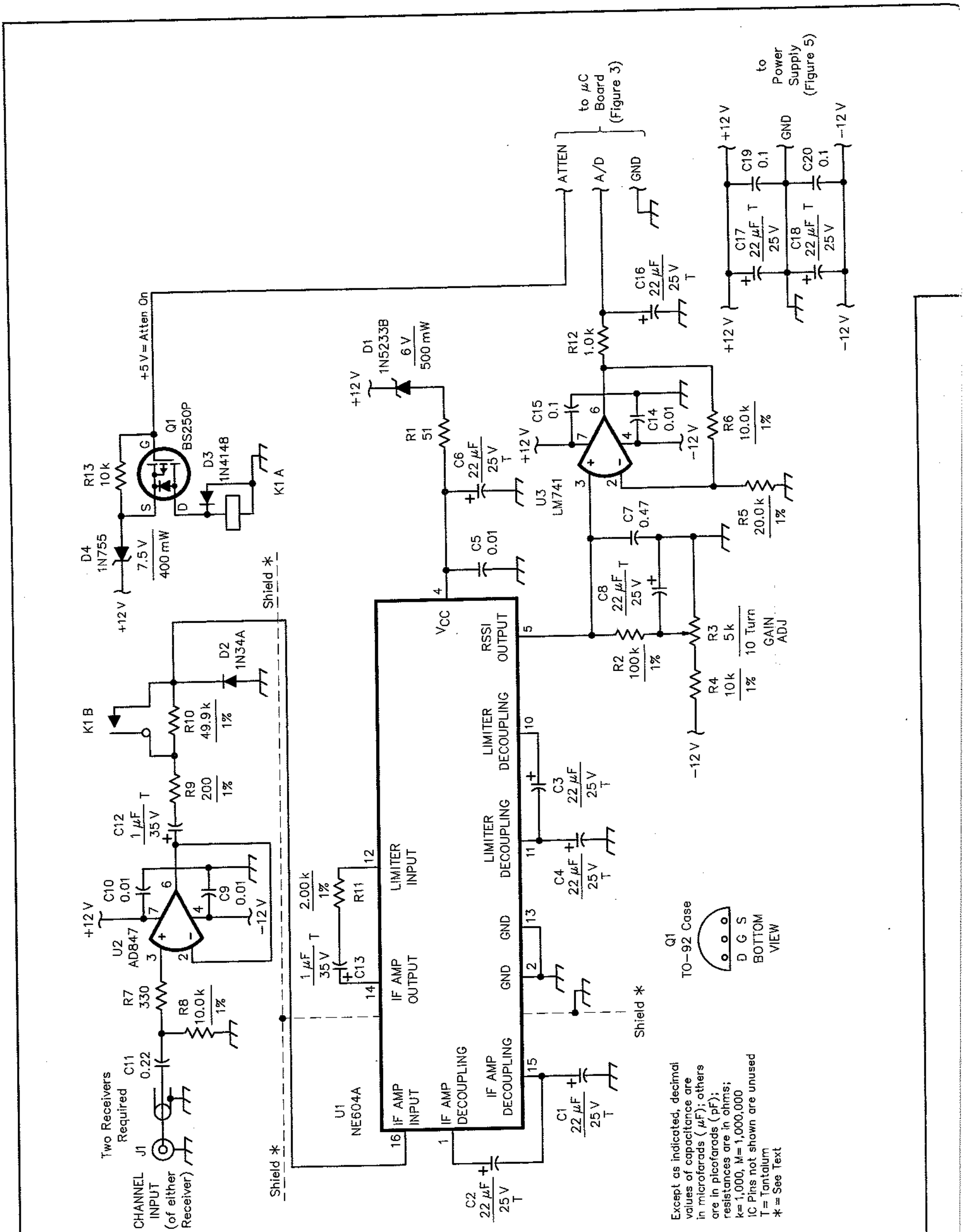

CHANNEL INPUT (of either Receiver)
J1
Two Receivers Required
C11 0.22
R7 330
R8 10.0 k 1%
U2 AD847
+12 V
-12 V
C10 0.01
C9 0.01
C12 1 µF 35 V T
R9 200 1%
R10 49.9 k 1%
K1 B
D2 1N34A
Shield *
D4 1N755 7.5 V 400 mW
R13 10 k
Q1 BS250P
D3 1N4148
K1 A
G S D
+5 V = Atten On
U1 NE604A
IF AMP INPUT
IF AMP DECOUPLING
IF AMP OUTPUT
LIMITER INPUT
LIMITER DECOUPLING
GND
VCC
RSSI OUTPUT
C1 22 µF 25 V T
C2 22 µF 25 V T
C13 1 µF 35 V T
R11 2.00 k 1%
C3 22 µF 25 V T
C4 22 µF 25 V T
C5 0.01
C6 22 µF 25 V T
R1 51
D1 1N5233B 6 V 500 mW
R2 100 k 1%
R3 5 k 10 Turn GAIN ADJ
R4 10 k 1%
C7 0.47
C8 22 µF 25 V T
R5 20.0 k 1%
U3 LM741
C14 0.01
C15 0.1
R6 10.0 k 1%
R12 1.0 k
C16 22 µF 25 V T
ATTEN
A/D
GND
to µC Board (Figure 3)
C17 22 µF 25 V T
C18 22 µF 25 V T
C19 0.1
C20 0.1
to Power Supply (Figure 5)
Q1 TO-92 Case
D G S
BOTTOM VIEW
Except as indicated, decimal values of capacitance are in microfarads (µF); others are in picofarads (pF); resistances are in ohms; k=1,000, M=1,000,000
IC Pins not shown are unused
T = Tantalum
* = See Text

Figure 2—At the heart of the receiver circuit is a Philips/Signetics NE604A IC. This IC is designed for IF limiting and detection in narrow-band FM portable radios. Here it is used for its received signal strength indicator (RSSI), a port that delivers a linear output for a logarithmic change in input voltage. Even when used in a wideband mode, the noise floor is below –70 dBV. The input impedance of the receiver is 10 kΩ. Two of these receivers are required: one for the reflection path and another for the transmission path. Unless otherwise specified, resistors are ¼ W, 5% tolerance carbon-composition or film units. Equivalent parts can be substituted.

Parts are available from a number of suppliers including Allied Electronics, Digi-Key, Mouser Electronics, Newark Electronics and Radio Shack. (Allied Electronics, 7410 Pebble Dr, Fort Worth, TX 76118, tel 800-433-5700, **http://www.allied.avnet.com**; Digi-Key Corp, 701 Brooks Ave S, Thief River Falls, MN 56701-0677 tel 800-344-4539, 218-681-6674, fax 218-681-3380, **http://www.digikey.com**; Mouser Electronics, 2401 Hwy 287 N, Mansfield, TX 76062, tel 800-346-6873, 817-483-4422, fax 817-483-0931, e-mail **sales@ mouser.com**, **http://www.mouser.com**; Newark Electronics, 4801 N Ravenswood Ave, Chicago, IL 06040-4496, tel 800-463-9275, 312-784-5100, fax 312-907-5217, **http://www.newark.com**.)

D1—1N5233B, 6 V, 500 mW Zener diode
D2—1N34A *germanium* diode
D3—1N4148 silicon switching diode
D4—1N755, 7.5 V, 400 mW Zener diode
J1—Chassis mount BNC jack
K1— SPST relay (Digi-Key Z660, or Mouser 528-171-2)
Q1—BS250P, P-channel enhancement-mode MOSFET (Digi-Key)
R3—10-turn potentiometer (Digi-Key 3296P-103 [Bourns type 3296P])
U1—NE604A (Allied, Newark, Digi-Key); see Note 1.
U2—AD847 high-speed, low-power monolithic op amp (Allied)
U3—741 op amp

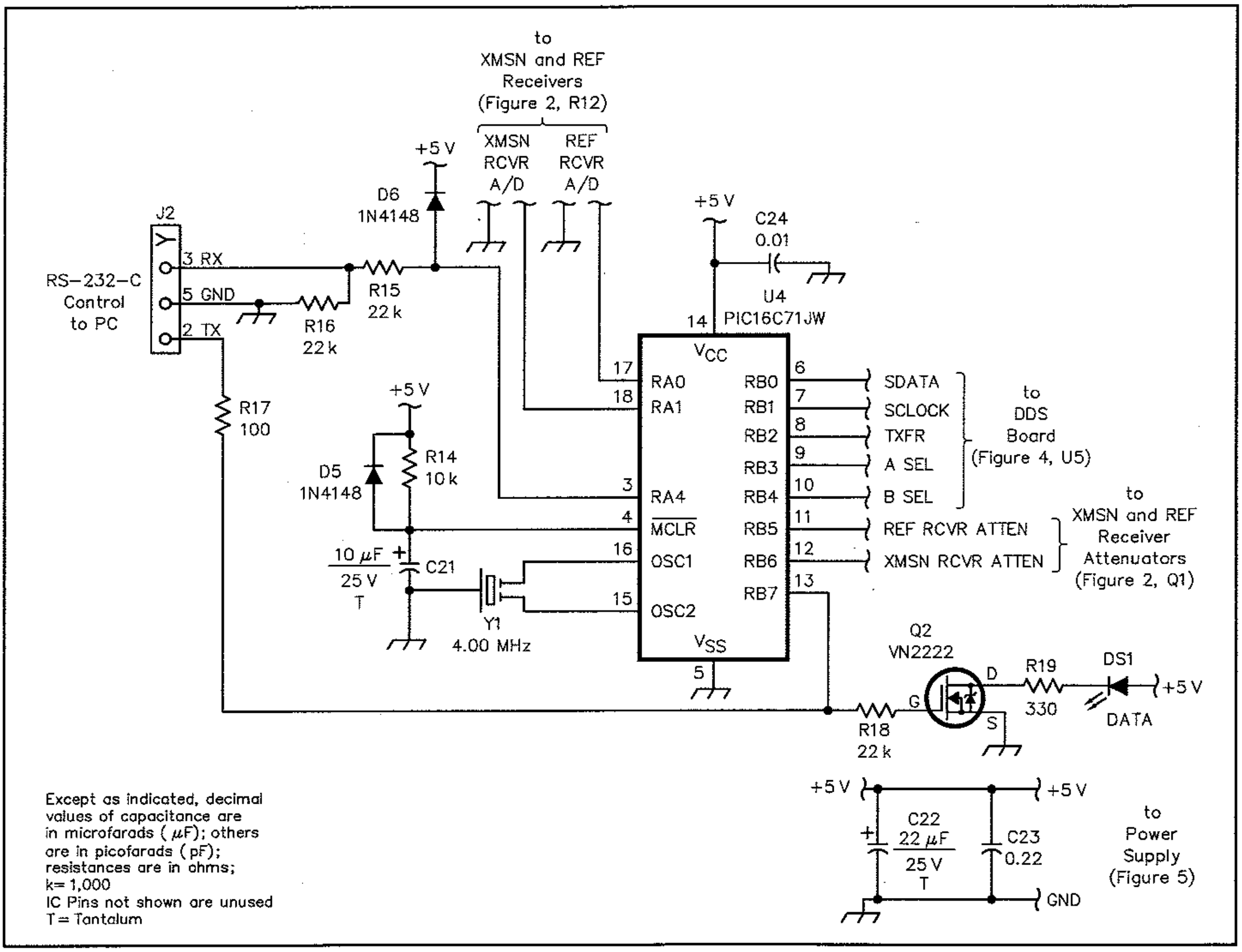

Except as indicated, decimal values of capacitance are in microfarads (µF); others are in picofarads (pF); resistances are in ohms; k= 1,000
IC Pins not shown are unused
T= Tantalum

Figure 3—The microcontroller (µC) circuit uses a popular PIC16C71 from Microchip Technology. The µC receives commands from the PC via an RS-232-C connection. These commands are decoded and the hardware is set accordingly. The 16C71 also contains a 4-channel, 8-bit A/D converter that reads the receiver outputs. Using a simple µC considerably reduces the component count. The other major advantage is instant reconfiguration as the design progresses from concept to reality. Unless otherwise specified, resistors are ¼ W, 5% tolerance carbon-composition or film units. Equivalent parts can be substituted.

D5, D6—1N4148 silicon switching diode
DS1—LED
J2—DB9 connector
Q2—VN2222, N-channel enhancement-mode MOSFET (Allied)
U4—PIC16C71JW microcontroller; must be *programmed* to function properly. (Blank part available from Digi-Key; *programmed* part available from the author, see Note 6.)
Y1—4 MHz resonator (Digi-Key X902)

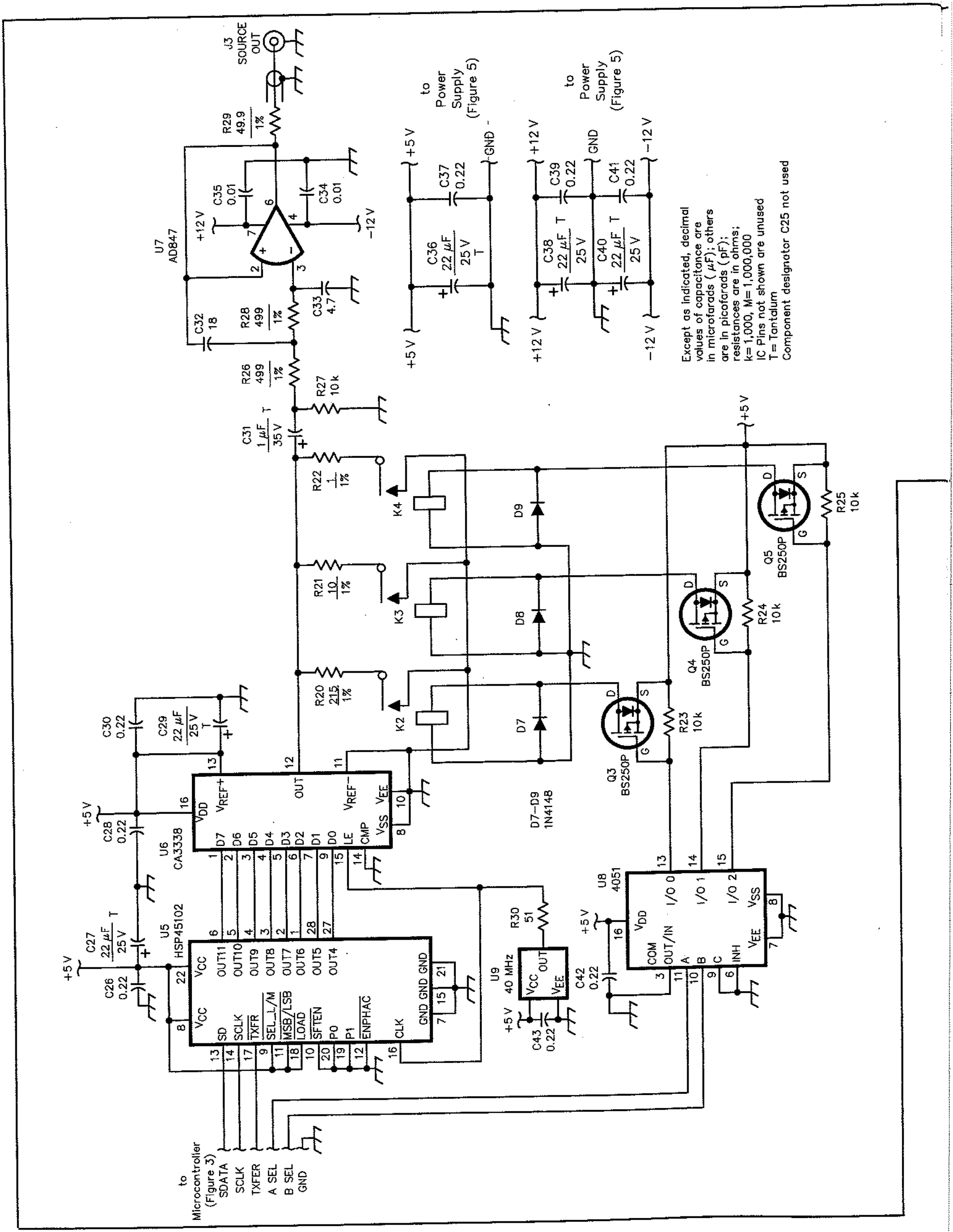

Except as indicated, decimal values of capacitance are in microfarads (μF); others are in picofarads (pF); resistances are in ohms; k=1,000, M=1,000,000
IC Pins not shown are unused
T= Tantalum
Component designator C25 not used

Figure 4—Building a high-frequency source is becoming exceedingly easy with the advent of DDS ICs such as the Harris HSP45102. This minimum component source features a 10 Hz to 16 MHz output frequency range and programmable output levels to help optimize the dynamic range of the circuit. The source can also be used by itself as a general-purpose fully programmable "lab source" by using the PC control program in a manual fixed-frequency mode. Unless otherwise specified, resistors are $^1/_4$ W, 5% tolerance carbon-composition or film units. Equivalent parts can be substituted.

D7-D9—1N4148 silicon switching diode
J3—BNC chassis mount connector
K2-K4—SPST relay (Digi-Key Z660; Mouser 528-171-2)
Q3-Q5—BS250P MOSFET (Digi-Key)
U5—HSP145102 12-bit numerically controlled oscillator (Allied)
U6—CA3338 video speed 8-bit R2R DAC (Allied)
U7—AD847 high-speed, low-power monolithic op amp (Allied)
U8—4051, 8-channel mux/demux (Allied, Digi-Key)
U9—40 MHz oscillator (Digi-Key CTX175)

Basics of a Network Analyzer

A network analyzer is designed to graphically show a plot of the voltage gain or loss of a network versus frequency. Such plots are called *Bode* plots. They are produced by computer circuit-analysis programs and frequently appear in circuit-design textbooks.

Typically, a network analyzer consists of a swept-frequency source driving two receivers and the network under test. One receiver accurately measures the *reflection* (or input) voltage to the network. A second receiver in the *transmission* channel measures the output of the network under test. The analyzer's *source* signal is swept over the frequency range of interest and a Bode response plot of the network results (you'll see sample plots in Part 2). The ratio of the input and output levels is displayed graphically in decibels and represents the voltage gain or loss of the network.

Commercial network analyzers cost several thousands of dollars or more, and may be able to analyze circuits at millihertz to microwave frequencies (50 to 100 GHz). There are many special designs available that allow fast sweeps for automatic testing, or very wide dynamic range for highly precise measurements.

The Personal Network Analyzer

This homemade network analyzer deviates from most commercial network analyzers in that it has broadband inputs. Commercial network analyzers use very narrowband receiver inputs, and at higher frequencies, use superheterodyne down-conversion to move the response to a lower frequency. Using broadband inputs makes the receivers respond to the sum of all input voltages over the full receiver bandwidth. This decreases the dynamic range of the analyzer and the achievable accuracy. These trade-offs are acceptable because they lower the design's parts count and complexity by at least 50%.

The Personal Network Analyzer (PNA) shown in Figure 1 has the same basic building blocks as those of a commercial analyzer: a swept source frequency and two receivers. To program the analyzer and display the results, I use an RS-232-C communications link. This allows a control program run on a PC to set the test frequency, read both receiver inputs and plot the results directly to the PC's display.

Receiver Circuit

The reflection and transmission receivers (see Figure 2) are identical and are based on the Philips NE604A/SA604A. The NE604A (U1) is used as a high-dynamic-range, wideband, RMS-to-dc converter. The RMS voltage at the input of U1 (pin 16) is converted to a linear dc voltage at its output by a series of limiting amplifiers. The limiting-amplifier action serves to convert a 10-fold change in input signal level to a linear output voltage, or about 44 mV output per decibel change on the input. By itself, U1 responds to signals from microvolts to about 0.32 V peak to peak.

To extend the receiver's dynamic range and increase its input impedance, I use an AD847 (U2) buffer amplifier ahead of U1. A 10 kΩ resistor at the buffer input sets the receiver input impedance at 10 kΩ; U2 buffers the input voltage to drive the lower impedance of U1. I chose an AD847 for U2 because it has a wide bandwidth (50 MHz) and very low noise. The low noise is significant because it helps to keep the total noise floor low in this wideband design.

U2 is followed by a switchable 30 dB attenuator. The attenuator has about half the available dynamic range of the receiver alone, significantly extending the system's total dynamic range. To maximize the receiver's dynamic range, the attenuator is software controlled. With the attenuator switched in, U1 does not overload with signal amplitudes as high as 10 V peak to peak.

The dynamic range of U1 exceeds 80 dB in narrow-band applications, and its RSSI voltage can swing from 0.2 to 4.8 V. In this wideband design, the noise floor is about –60 dB. This allows the RSSI output voltage to range from about 1.5 to 4.8 V.

Because the analog-to-digital converter (ADC) within the PIC16C71 (U4 of Figure 3) has an 8 bit, 0 to 5 V input, if the RSSI voltage is allowed to swing from 1.5 to 4.8 V, dynamic range is reduced. To make full use of the ADC's input range, the RSSI voltage is offset negatively by about 1.5 V by the **GAIN ADJUST** pot, R3, and the resistive divider. (R3 is the *only* adjustment in this analyzer.) R3 equalizes the full-scale voltage of each receiver, thereby achieving maximum dynamic range. The ultimate resolution of this design is approximately equal to 60 dB / 256 possible output codes of the ADC, or about 0.23 dB per ADC least-significant bit (LSB) change. This allows for an RSSI range of about 0 to 3.3 V.

U3 is set for a gain of 1.5 to provide the ADC with a full 0 to 5 V input swing. U3 buffers and filters the voltage, then sends to the microcontroller board (Figure 3) for analog to digital conversion.

DDS Source Circuit

A basic circuit for a DDS (direct digital synthesizer) source built around the Harris

Network Analyzers and I

I designed my first network analyzer around 1985. It used a general-purpose analog VCO (an Intersil ICL8038) as the driving source, and a pair of RMS-DC converter chips as receivers. I remember the date because I programmed it through some A/D and D/A converters of my Apple II computer! It had its limitations: The dynamic range was only about 30 dB, and the frequency topped out at 100 kHz. Good enough for audio, but not even close for the simplest 455 kHz IF.

This design started out a few years ago when numerically controlled oscillators (NCOs— also called direct digital synthesis, or DDS chips) began appearing in designs* based on the Harris HSP45102. This part allowed a two-chip solution to generating sine waves from 0.01 Hz to around 16 MHz with 32 bits of digital programming. Building a low-noise PLL to do this would involve lots of bench debugging time. Changing frequencies would be slow because of the low frequencies involved.

In 1994, I built my first of several DDS oscillators based on the Harris chip. When they are clocked at 40 MHz, 10 Hz to 10 MHz programming is very clean and reasonably spur-free. The output can be coaxed to 16 MHz output, but Nyquist sampling limitations and aliased spurs start appearing only –20 dBc down from the main carrier. For more information on DDS methods and limitations, see the notes at the end of this article.—*Steve Hageman*

*Bruce Hodgkinson, VE3JIL, "Julie Board—An Easy\ to Build DDS Synthesizer," *73 Amateur Radio Today*, Aug 1993, pp 40-46; staff article, "Direct Digital Synthesis—Part 2," *Electronics + Wireless World*, Sep 1992, pp 746-748, **http://www.reedbusiness.com**; Laurence Kushner and Marcus Ainsworth, "Spurious Reduction for Direct Digital Synthesis," *Applied Microwaves and Wireless*, Summer 1996, pp 44-60, e-mail **amw@amwireless.com**; Allen Hill and Jim Surber, "Digital Synthesis Generates Analog Signals yet Eases Frequency Hopping," *Personal Engineering and Instrumentation News*, August 1994, pp 46-52 and Fred Williams, "A Microprocessor Controller for the Digital Frequency Synthesizer," *QST*, Feb 1985, pp 14-20.

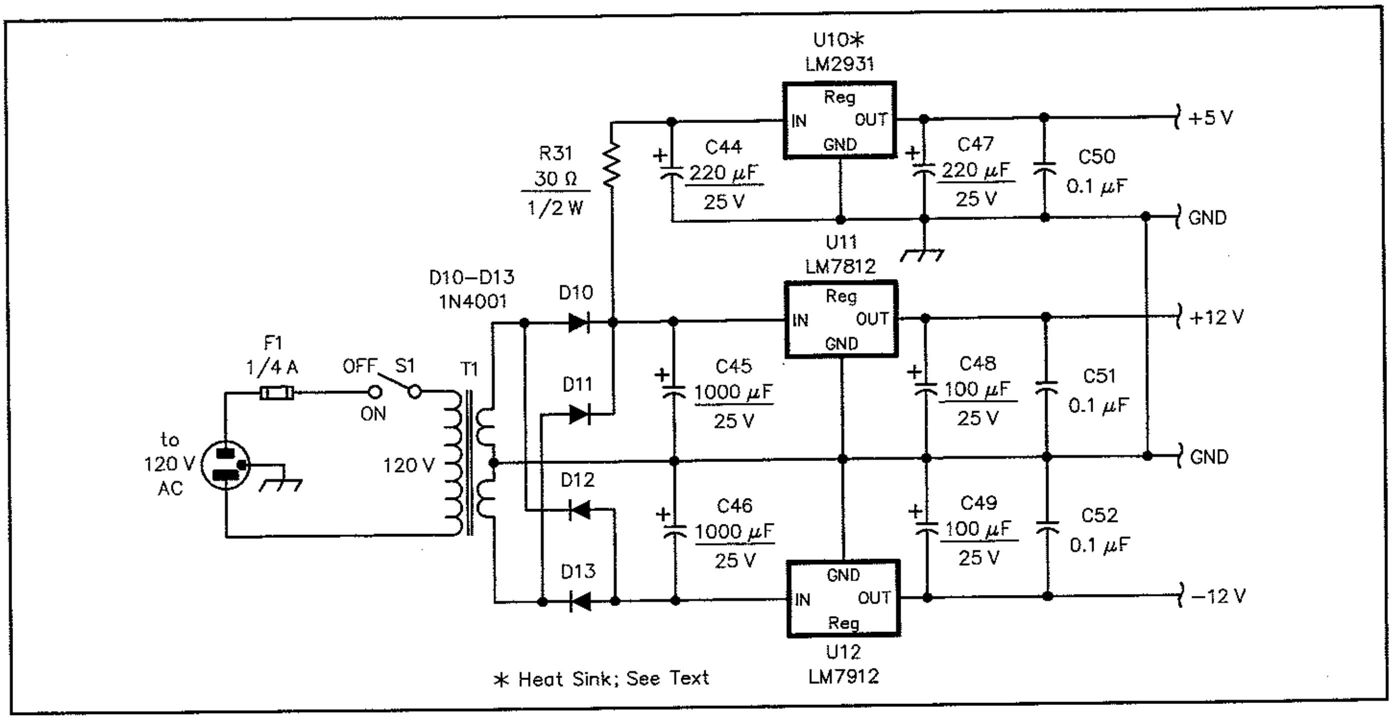

Figure 5—Providing it delivers the analyzer's required voltage and current requirements, (+12 V at 120 mA, −12 V at 60 mA and +5 V at 100 mA) nearly any of your favorite regulated power-supply circuits will work here; this circuit is presented for completeness. Current drain is low, just be sure to have a fairly accurate +5 V output, as the A/D converter uses this supply as a reference (see text). Equivalent parts can be substituted.

C44, C47—220 µF, 25 V aluminum electrolytic
C45, C46—1000 µF, 25 V aluminum electrolytic
C48, C49—100 µF, 25 V aluminum electrolytic
D10-D13—1N4001
F1—¼ A, 125 V fuse
S1—SPST toggle switch
T1—120 V pri, 25 V, 450 mA, c.t. sec (Radio Shack # 273-1366)
U10—LM2931-5 V, 100 mA, low-dropout voltage regulator
U11—7812, 12 V, 1 A positive voltage regulator
U12—7912, 12 V, 1.5 A negative voltage regulator

Semiconductor HSP45102 (U5 of Figure 4) has been around for several years. My circuit offers improvements such as ac coupling to the output, three programmable outputs and a 16 MHz, active, low-pass filter to help control harmonics and flatten the frequency response.

When U5 is programmed with a 32-bit serial word, it produces a digital equivalent of a sine wave at its output. The output frequency is changed by sending another 32-bit word to the device. The high-speed version of the IC allows clocking at 40 MHz. Although the device operates with a 12-bit internal word size and has the capability to drive a 12-bit digital-to-analog converter (DAC), I use an 8-bit Harris CA3338 at U6. The reasons are simple: It is a readily available, relatively low-cost IC, and it can be clocked at 40 MHz. Twelve-bit DACs capable of operating at these frequencies do a great job of lightening your wallet, and the performance difference (moving from 8 to 12 bits) isn't great enough to warrant the extra cost.

Computer-controlled, relay-switched attenuators provide outputs of 5, 2.8, 0.3 and 0.032 V peak to peak. Having a switchable signal source output increases the analyzer's dynamic range. It allows the control program to reduce or increase the input voltage to the network under test and keeps the receiver inputs in the linearly active portion of their range. The attenuators use shunt resistors to divide the approximate 160 Ω output impedance of DAC U6, and derive a lower voltage swing.

Accurately controlling the signal source's absolute *amplitude* is not required here because the receivers operate ratiometrically. That is, the *ratio* of the input to output is important, *not the absolute value* of the input voltage or output voltage.

The output of a digitally sampled sine wave has a "sine X over X" response. What this means is that as the output frequency approaches the clocked or sampled frequency, the voltage rolls off in a sort of sine-wave-shaped response. The first null of the roll-off is at the clock frequency. The low-pass filter (U7) was optimized with *Touchstone*[2] to provide a slight peaking at the cut-off frequency to compensate for the roll off. The resulting response is flat to within ±1 dB from 10 Hz to 10 MHz, and falls off to about −3 dB at 16 MHz.

I have built DDS circuits that have harmonics and spurs suppressed more than −50 dBc up to 5 MHz, and degrade to −40 dBc at 10 MHz. Above 10 MHz, the alaising spurs rise to the −20 dBc level and start to appear below the programmed frequency. For example, with an output frequency of 16 MHz, the largest aliased spur is actually around 5 MHz.

U9, the DDS master clock, is a 40 MHz CMOS oscillator. These canned oscillators are inexpensive and are typically accurate to well within 0.01% of their marked frequency. The clock sets the absolute accuracy of the output frequency. By using a 0.01%-tolerance oscillator, the output frequency is within ±1 kHz when programmed at 10 MHz.

Microcontroller Circuit

The microcontroller (U4 of Figure 3) is one of the popular PIC series from Microchip Technology.[3] I chose it because it's truly a single-chip controller and because of its low development and support cost. (I built a complete development system including a programmer, a first-rate C compiler[4] and a UV eraser for under $200.) The microcontrollers are readily available, and the reprogrammable types can be erased and used again and again for other projects.

One selling point of the 16C71 is that it is easy to program the device for RS-232-C serial communication using only three wires to connect to the host PC. The IC also contains a four-channel, 8-bit ADC.

U4's basic job is to read commands from the RS-232-C port, set the source frequency, adjust the source and receiver attenuators and read the receiver output voltages (via U4's built-in ADC). I wrote a small C program to interpret ASCII commands from the RS-232-C line and set the appropriate bits high or low on U4's output pins. Full software handshaking is implemented by returning an acknowledgment character, the asterisk (*), after each successfully read command. If, for any reason, the synchronization between the PC and the PIC is broken, the PC senses the error and resynchronizes the programs. U4's internal, four-channel ADC makes it easy to get data from the real world and send it along the RS-232-C line to the PC for processing. When operating at 4 MHz, U4's power dissipation is just a few milliwatts and the RS-232-C connection operates comfortably at 9600 baud.

The availability of low cost, efficient C (see Note 4) and BASIC[5] compilers for these devices also means that you don't need to learn another assembly language to put these processors to work. Instead, you can work comfortably in a high-level language.

Of course, the functions provided by the PIC could have been implemented with half a dozen discrete logic chips and the result would have been the same. But the design and building time was cut from a week to just *an afternoon* using the PIC IC!

Power Supply

The power supply (Figure 5) is straightforward. A 25-V center-tapped transformer provides unregulated ±17 V to the three-terminal regulators.

The only item worthy of note here is that the regulator used for the +5 V output (U10) should be the fairly accurate (±2% or better) type specified. This is because that regulator powers the microcontroller, which uses this voltage as a reference for its internal ADC. Keep this voltage as close as possible to 5 V to optimally maintain the receivers' dynamic range. Mount U10 on a small heat sink as it dissipates some power because of the large voltage drop across it (12 V, with 17 V at the input).

Construction Notes

Except for the receivers, most of the circuits are not critical and can be built just about any way you desire. A *programmed* IC[6] and set of PC boards for this project is available.[7] For the prototype, I used breadboard construction and small pieces of copper-clad PC board. The copper cladding provides a convenient ground plane and the circuits are built above the board.

The signal source and both receivers are built on small boards and housed in individual aluminum boxes. The boxes fully enclose the circuitry and help to reduce the noise floor.

Exercise special care when building the receivers. You must separate the receiver inputs if you are going to achieve the 60 dB dynamic range possible with this design. Because of the high impedance levels here (the NE604 has a 1.6 kΩ input impedance) capacitive coupling is the mechanism we need to avoid. For instance, I built my receivers pretty much as the schematic flows, with the input circuit on top, then the input signal folding back past the NE604 to the NE604's input. This created a coupling path from the middle section of the NE604 amplifier chain to the input. The net effect is regeneration, if not downright oscillation! The noticeable effect of regeneration is a noise floor that's only 30 or 40 dB down from full scale. To cure this problem, I fashioned some copper-foil shields wrapped in insulating tape and placed them as indicated in Figure 2. The noise floor dropped considerably when they were positioned correctly.

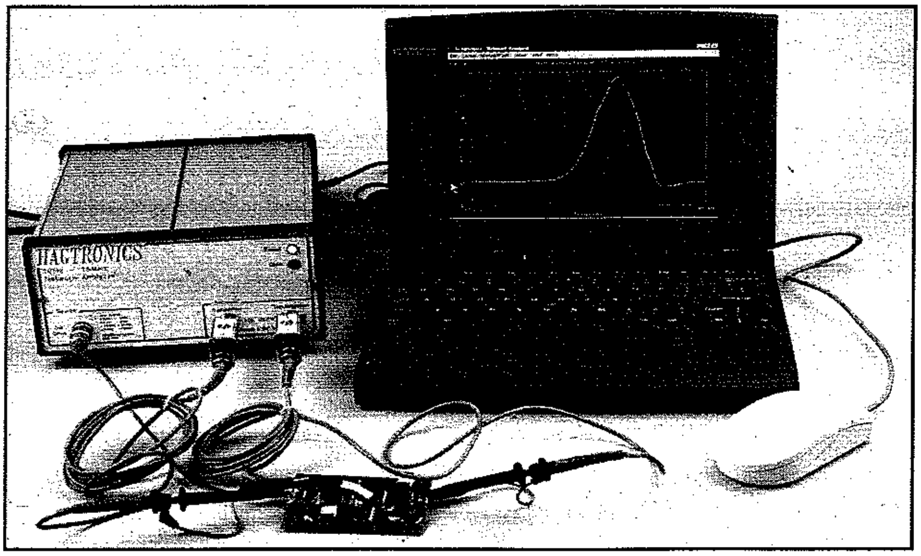

The Personal Network Analyzer at work. Two modified, switchable (×1 and ×10) scope probes are shown here.

The DDS source circuit (Figure 4) has just the opposite problem. Because the impedance levels here are below 300 Ω, the coupling mechanism is magnetic. This means that stray circuit inductance is important. To hold the inductance to a minimum, keep the wiring loop areas to an absolute minimum. Ensure all lead lengths are as short as possible and use short connections to the ground plane.

Because of the high speeds and large digital switching current on the DDS board, decouple *everything*! U5 must be decoupled to prevent ringing that will feed through to the DAC, U6. The DAC needs to be decoupled to prevent digital noise from appearing at its output.

Make the ground traces from U6 to the output of the active filter as direct as possible. Otherwise, any ground "bounce" caused by currents flowing through ground inductance will show up directly at the filter output.

Each circuit's ground plane is tied to its shield box by a piece of braid that is soldered to the copper-clad ground plane and slips between the box halves when assembled. The individual boxes are then bonded together with more braid.

Where Do We Go from Here?

In Part 2, I'll discuss the control program (*ANALYZER.EXE*), the PNA setup, and provide examples of some of the measurements that can be made with the analyzer. See you then!

Notes

[1] Philips is discontinuing production of the NE604A and using the SA604A extended temperature range version in its stead. References made here to the NE604A apply equally to the SA604A.

[2] HP-EEsof, "Touchstone for Windows—Users Guide," 1995, Hewlett-Packard Company, Palo Alto, CA; **http://www.tmo.hp.com/tmo/hpeesof/**

[3] Microchip Technology Inc, 2355 W Chandler Blvd, Chandler, AZ 85224-6199, tel 602-786-7200, fax 602-899-9210; **http://microchip.com**.

[4] *PCM—PIC C Compiler Reference Manual*, Custom Computer Services, Inc, PO Box 2452, Brookfield, WI; tel 414-781-2794, fax 414-781-3241; **http://www.ccsinfo.com**.

[5] *PBasic Compiler*, microEngineering Labs, Inc, Box 7532, Colorado Springs, CO 80933, tel 719-520-5323, fax 719-520-1867; **http://www.melabs.com**.

[6] *Programmed* 16C71 microcontrollers for this project are available from Steve Hageman, 9532 Camelot Dr, Windsor, CA 95492, e-mail **shageman@sonic.net**. Price: $15 US, including shipment by First Class surface mail. Credit cards are not accepted.

[7] PC boards for this project are available from FAR Circuits, 18N640 Field Ct, Dundee, IL 60118-9269, tel 847-836-9148 (voice and fax). Price: $21.50 for the three-board set (the microcontroller and signal-source circuits are combined on one board) plus $1.50 shipping. Visa and MasterCard accepted with a $3 service charge.

Steve Hageman, a confirmed "analogaholic," has worked on analog circuits from dc to 18 GHz since he was a fifth-grader. He has authored more than 60 papers on analog design and analysis. Steve works on RFIC test systems development for the Hewlett-Packard Company. You can contact Steve at 9532 Camelot Dr, Windsor, CA 95492, e-mail **shageman@sonic.net, http://www.sonic.net/~shageman.**

Further Reading

HSP45102 Data Sheet, 1994, Harris Corporation, Melbourne, FL; **http://www.semi.harris.com**

CA3338A Data Sheet, 1995, Harris Corporation, Melbourne, FL; **http://www.semi.harris.com**

TB318, "The NCO As A Stable, Accurate Synthesizer," 1993, Harris Corporation, Melbourne, FL; **http://www.semi.harris.com**

QST